International Journal of Advanced Technology in Engineering and Science
Vol. No.4, Special Issue No. 01, May 2016
www.ijates.com
ijates
ISSN 2348 - 7550

A REVIEW ON EXHAUST GAS RECIRCULATION (EGR) SYSTEM IN IC ENGINES

Jitender Singh[1], Vikas Bansal[2]

[1,2] Department of Mechanical Engineering, University College of Engineering, Rajasthan Technical University, Kota (India)

ABSTRACT

As we know there are several type of vehicles are used in the world. In all vehicles internal combustion engines, being the major power source in the transportation sector as well as in individual transport. Today internal combustion engines play an important role in the man-made emissions.

The performance of a Diesel engine is affected by various parameters like compression ratio, air fuel ratio, speed etc.Diesel engine performance increases with increase in compression ratio. In IC engines compression technologies are used to increase fuel efficiency under variable loads. But the exhaust gas from vehicles under variable loads pollutes the environment. The exhaust gases contain toxic gases, mainly nitrogen oxides (NOx) and soot particles. This thesis aims exhaust gas recirculation (EGR) system was built in the internal combustion engine to reduce the pollution in the environment. Exhaust gas recirculation (EGR) is a common way to control in-cylinder NOx production and is used in most modern high speed direct injection diesel engines.

I. INTRODUCTION

Here, we know there are two types of internal combustion engines. One is SI engine, which is known as petrol engine and second is CI engine, which is known as diesel engine.Diesel engine popular, because of better fuel economy and high power with low maintenance cost. Diesel engines are used for bulk movement of goods, to generate electric power. Internal combustion engines are the main power source for the automobile vehicles which is used by transportation industries.

Mostly all the diesel engines have high thermal efficiencies, resulting from their high compression ratio and fuel lean operation. The high compression ratio of the diesel engine produces the high temperatures in the combustion chamber. Diesel engine combustion generates large amounts of NOx because of the high flame temperature in the presence of abundant oxygen and nitrogen. So the extra oxygen is required in the cylinders to complete combustion and to compensate for non-homogeneity in the fuel distribution.

So reduce the amount of oxides of nitrogen (NOx) or supply the extra oxygen in the cylinders the exhaust gas re-circulation (EGR) system is built in the internal combustion engines. NOx produced by the engine during operating periods that usually result in high combustion temperature. The EGR system reduces NOx production by re-circulating small amounts of exhaust gases into the intake manifold where it mixes with the incoming air/fuel charge.

Generally EGR flow should match following operating conditions:

- High EGR flow is necessary during midrange acceleration, when combustion temperature is very high.

- Low EGR flow is necessary during low speed and light load.
- No EGR flow should occur during engine warm up, idle, wide open throttle etc.

Pollutants are because of the incomplete burning of the air fuel mixture in the combustion chamber. During combustion NOx, HC, CO are produced. So for control this pollutant EGR is an effective method.

If, in the internal combustion engines combustion is complete, the only products being mixed with exhaust would be water vapour and carbon dioxide, which are not directly harmful to humans.

II. VEHICLES WITHOUT EGR SYSTEM:

2.1. Introduction

Firstly here, we talk about the internal combustion engines. CI engine was invented by "Rudolf Diesel" in 1890s. CI engine also known as diesel engine. And another is SI engine which was built by "Nikolaus August Otto" in 1876s.

In 1890s, Rudolf Diesel invented an efficient, compression ignition, internal combustion engine that bears his name. Early diesel engines were large and operated at low speeds. High-speed diesel engines were introduced in the 1920s for commercial vehicle applications and in the 1930s for passenger cars.

After 1930s there were several type of diesel and petrol vehicles were coming in the market according to the load and size. There are many methods injecting the fuel in the cylinder of engine like Direct and Indirect injection, mechanical and electronic injection, unit direct injection, and common rail direct injection. Today common rail direct injection and electronic injection methods are mostly used in the diesel engines. These methods are used to increase the efficiency of the engine.

As we know when diesel engines start so exhaust gas generated from burn the fuel in combustion chamber of the engine. During lean-burning nature, high temperature and pressure of the combustion process result in significant production of gaseous nitrogen oxide air pollutants. Pollutants are because of the incomplete burning of the air fuel mixture in the combustion chamber. The major pollutants emitted from the exhaust due to incomplete combustion are,

- Carbon monoxide (CO)
- Hydrocarbons (HC)
- Oxide of nitrogen (NOx)

III. FORMATION OF THESE POLLUTANTS IN THE IC ENGINE

3.1 Carbon monoxide (CO):-

CO is a colourless, odourless, and tasteless gas and also lighter than air. Carbon monoxide is a toxic gas for humans and animals. In IC engines CO is generally formed when the mixture is rich in fuel. The amount of CO formation increases when mixture becomes more and richer in fuel. When mixture is lean then CO will come out in small amount. In the IC engine during combustion high temperature developed, the product formed and following reaction take place

$$2C+O_2 = 2CO$$

After combustion the products cool down to exhaust temperature, major part of CO reacts with oxygen to form CO_2. However, a relatively small amount of CO will remain in exhaust.

3.2 Hydrocarbons (HC):-

Hydrocarbons are formed when the fuel unburned in the combustion chamber. Hydrocarbons appear in exhaust gas due local rich mixture pockets at much lower temperature than the combustion chamber and due to flame quenching near the metallic walls. A significant amount of this un-brunt hydrocarbon may burn during expansion and exhaust strokes if oxygen concentration and exhaust temperature is suitable for complete oxidation.

3.3 Oxide of nitrogen (NOx):-

Oxides of nitrogen is produced in very small quantities can cause pollution. An oxide of nitrogen is dangerous for human health. Oxides of nitrogen which occurs only in the engine exhaust are a combination of nitric oxide (NO) and nitrogen dioxide (NO_2). Nitrogen and oxygen react at relatively high temperature. NOx is formed inside the combustion chamber in post-flame combustion process in the high temperature region. The high peak combustion temperature and availability of oxygen are the main regions for the formation of NOx. In the present of oxygen inside the combustion chamber at high combustion temperatures the following chemical reactions will takes place.

$$N_2+O_2 = 2NO$$

$$N_2+2H_2O = 2NO+H_2$$

A significant amount of NO will be formed at the end of combustion. The majority of NO formed will however decompose at the low temperatures of exhaust. But, due to very low reaction rate at the exhaust temperature, a part of NO formed remains in exhaust. The NO formation will be less in rich mixtures than in lean mixtures.

IV. NATURE OUTS POLLUTES MAN CHART

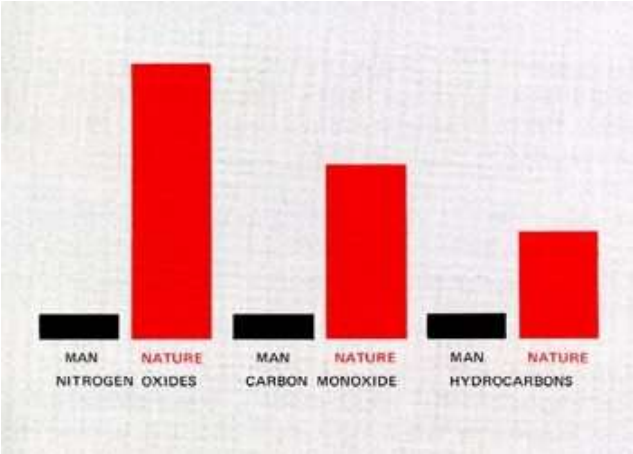

Fig. 1.2 Nature outs-pollutes man [5]

In this graph the three pollutants hydrocarbons, carbon monoxide and nitrogen oxides are shown. So according to the graph nitrogen oxides formed in very high quantity by the engine as compared to the other two. So in simple words we can say that the nitrogen oxides is the more effective pollutant in the environment it also very harmful for the human health. So before the implementation of the EGR system NOx is the pollutes the environment , so to control the NOx emission EGR system invented and it is built in the IC engine.

When we talking about the graph one more time so the NOx is more effective as compare to both pollutants CO and HC, and CO is more effective as compare to the HC. When diesel engine start and run on load so there are some another pollutants are formed from the engine like sulphur oxide (SOx), carbon dioxide (CO_2) etc. so to control the emissions EGR system was implemented in the IC engine.

V. ADVANTAGE AND DISADVANTAGE

There are following advantage and disadvantage of vehicle without EGR system:

Advantage of vehicle without EGR system:-

- Low cost of the vehicle or engine.
- No complicated design of the engine.
- No more cooling required.
- No more space required.
- Small radiator size.

Disadvantage of vehicle without EGR system:-

- Formation of toxic gases.
- Air pollution and harmful for human.
- Waste of fuel of the engine.
- Thermal efficiency decrease of the engine.
- Obtained less power.

VI. VEHICLES WITH EGR SYSTEM

4.1. Introduction: As we know vehicles are produced emission. So reduction of emission EGR system was built on the engine. The first EGR system built in 1973s on diesel engine.

4.2.NOx Emission control:

NOx emission is closely related to temperature and oxygen content in the combustion chamber. Any process to reduce cylinder peak temperature and concentration of oxygen will reduce the oxides of nitrogen. This suggests a number of methods for reducing the level of nitrogen oxides. The following are the three methods for reducing peak cycle temperature and thereby reducing NOx emission.

- Water injection.
- Catalyst

- Exhaust gas recirculation (EGR)

4.2.1 Water injection

In the IC engines NOx is generated during combustion. To reduce the level of nitrogen oxides (NOx) water injection method is used. NOx emission reduces with increase in water injection rate per kg of fuel. The specific fuel consumption decreases a few percent at medium water injection rate. The water injection system is used as a device forcontrol the NOx emission from the engine exhaust.

4.2.2 Catalyst

In the presence of CO nitrogen oxide (NOx) emission reduced by using the catalyst. In the IC engines catalytic converter is use to control the emission levels of various pollutants bychanging the chemical characteristics of the exhaust gases. A catalytic convertor is shown in figure. In modern vehicles catalytic convertor is used to control the emissions.

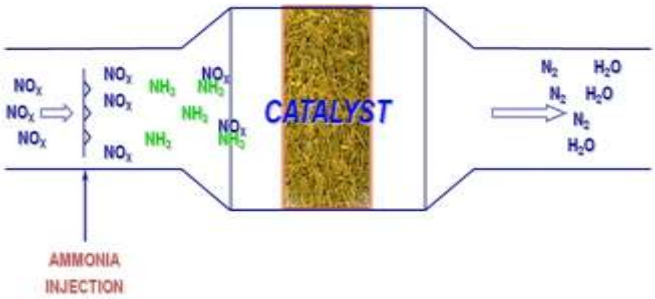

Fig. 2.2 Catalyst [1]

4.2.3 Exhaust Gas Recirculation:Exhaust Gas Recirculation is method which is used for NOx control. In the IC engine the exhaust gases mainly consist of carbon dioxide, nitrogen etc. and the mixture has higher specific heat compared to atmospheric air. Carbon dioxide and water vapour present in engine exhaust gas, so re-circulated exhaust gas entering in the combustion chamber with fresh air. From air displacement, small amount of oxygen is available in the intake mixture for combustion. Availability of oxygen reduced the air fuel ratio. So reduction in air–fuel ratio affects exhaust emissions. Re-circulated exhaust gas mixing with fresh intake air, so specific heat of intake mixture increases and from this flame temperature reduced. Thus combination of small oxygen quantity in the intake air and reduced flame temperature reduces rate of NOx formation reactions .The EGR (%) is defined as the mass percent of the re-circulated exhaust (MEGR) in the total intake mixture (Mt).

$$\text{EGR (\%)} = (\text{MEGR} \div \text{Mt}) \times 100$$

From above three methods, EGR is the most efficient and widely used system to control the formation of oxides of nitrogen inside the combustion chamber of I.C. engine. The exhaust gas for recirculation is taken through an orifice and passed through control valves for regulation of the quantity of recirculation.

4.3. Exhaust Gas Recirculation System

An exhaust gas re-circulation system is shown in figure. When exhaust gas re-circulation system is built, the engine intake consists of fresh air and re-circulated exhaust gas. Exhaust gases were tapped from exhaust pipe and connected to inlet airflow passage. An EGR control valve was provided in this pipe for EGR control.

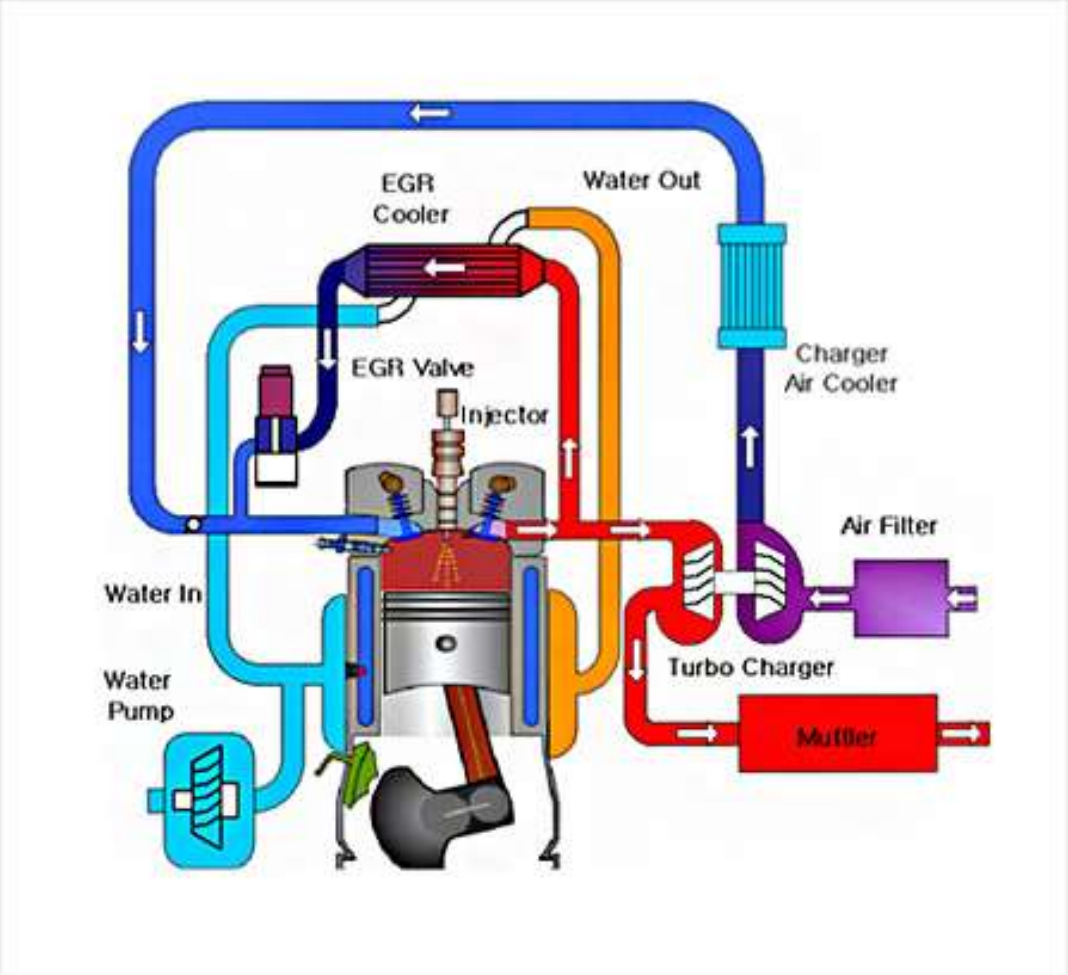

Fig. (3) EGR Systems in a Turbocharged Engine [2]

The exhaust gases were regulated by control valve and directly send to the inlet manifold. The above shown system is also called as hot EGR because it not fitted with an EGR cooler which is used to cool the intake mixture.

4.4. Types of EGR system: There are two types of EGR system which are following:

i. Low pressure EGR system
ii. High pressure EGR system

4.4.1 Low pressure EGR system: If a small part of exhaust gas passes through the turbine outlet to compressor inlet by the control valve then it is called low pressure EGR system. A low pressure EGR system is shown in figure. In low pressure EGRsystem, outlet manifold connected to the super charger turbine and the intake

manifolds connected to the super charging compressor. By throttle valve EGR flow is regulated. If the exhaust gas is directly re-circulated to the intake, then this type of operation is called **hot EGR system**. If the exhaust gas is re-circulated through EGR cooler, then this type of operation is called **cooled EGR system**.

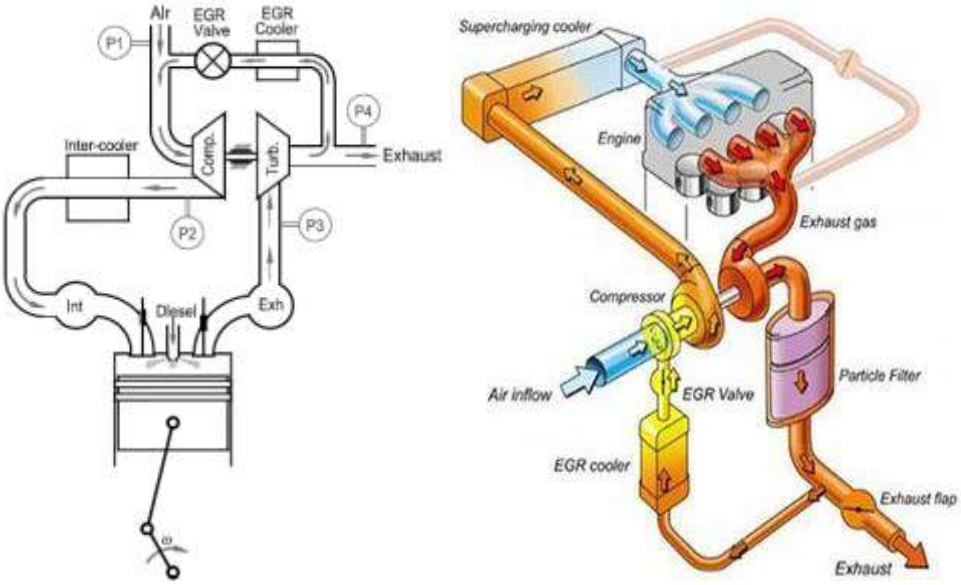

Fig. (4.1) Low pressure EGR system [7]

In this system exhaust gases are passing to the environment but some part of exhaust gas is passing to the intake manifold through EGR control valve. After then the exhaust gas mixed with the fresh air and the mixture of fresh air and exhaust gas cooled by inter-cooler. This type of system can be used by directing exhaust from the turbine outlet to the inter-cooler outlet directly bypassing the compressor.

4.4.2High pressure EGR system:

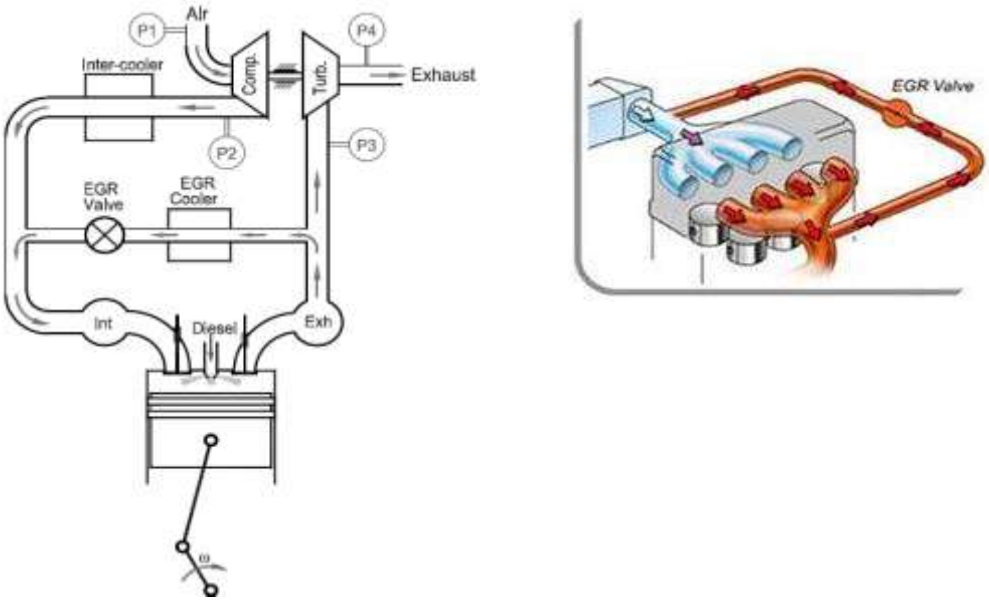

Fig.(4.2) High pressure EGR system [7]

Another method of EGR is high pressure EGR system is shown in figure. Exhaust gas is re-circulated from upstream of the turbine to downstream of the compressor or from upstream of the turbine to the downstream of the inter-cooler, then it is called high pressure EGR system. High pressure loop EGR system is only applicable when the turbine upstream pressure is sufficiently higher than the compressor downstream pressure (boost pressure).

4.5.Effects of EGR on Engine Parts:

The effects of EGR system on the engine parts are shown in the various pictures.It can be clearly seen that carbon deposits on the various parts of the engine operated with EGR system is significantly more than that of engine operated without EGR. The higher carbon deposits in the EGR system seem to be because of higher soot formation.

Fig.(5)Cylinder head with EGR & without EGR [1]

Fig. (5)Piston headwith EGR &without EGR [1]

Fig. (5)Injector tip with EGR& without EGR[1]

4.6. Advantage and Disadvantage:

There are following advantage and disadvantage of vehicle without EGR system:

Advantage of vehicle with EGR system:-

- No formation of toxic gases.
- Control on air pollution.
- Reduce NOx level.
- Complete combustion of fuel.
- Fuel consumption improves.
- Increase the efficiency of engine.
- Obtain high power.

Disadvantage of vehicle with EGR system:-

- High cost of the engine.
- Complicated design of engine.
- More cooling required.
- More space required.
- 15-20% bigger radiator size required.

V. CONCLUSION

As we know today automobile is the main power source for the transportation and also industry transport. In this review EGR system described. So from this review we can say the emissions are controlled by the EGR system. EGR system is used for all the company vehicles to control the emissions or air pollution. In modern vehicles

EGR system used with turbocharged engine. There are several examples of companies which are uses the turbocharged EGR system for heavy and also light vehicles. These companies are following:

- Ashok Leyland for heavy and light vehicles.
- Tata Motors also for heavy and light vehicles.
- All the light vehicles companies like Hyundai, Mahindra, Honda, and Toyota etc.

The following major findings from using the EGR system with turbocharged engine:

- Increasing the thermal efficiency of the engine when EGR system is used in the modern vehicles.
- Improvements in the fuel economy and also control the emissions using EGR system.
- Using the EGR system with turbocharged engine NOx production reduced in the cylinder of the engine.

VI. FUTURE SCOPE

Today automobiles companies are use the pollution control technologies in the engine for the human health. In the modern vehicles to control the emissions EGR system is used and also for better efficiency of the engine turbocharging technique is implemented. So today in the modern vehicles turbocharged EGR system is used. Some automobile industries are used the advanced technologies for increase the efficiency of the engine and also for the reduction of pollutants created by the engine. Advance turbocharging, electric turbocharging and turbocharged EGR system with catalytic convertor are the advanced technologies.
Here we discusses advanced after treatment control technologies, which can reduce NOx without increasing fuel consumption. And also discuss advanced engine control technologies.

- Advanced TWC (three way catalyst)
- Ammonia slip catalyst
- Advanced Air/Fuel ratio control
- Port fuel injection
- Advanced injection timing

According to the Volkswagen Company diesel engines are the only engine which pollutes the environment widely. So Volkswagen moving away from diesel engine and for clean environment Volkswagen develops the electric and hybrid cars.

REFERENCES

[1] Effect of EGR system on engine parts pictures from www.google.com
[2] Exhaust gas re-circulation system from www.pediain.com
[3] Vipul Jain, Dipesh Singh Parihar, Vaibhav Jain and Irfan H Mulla, Performance of Exhaust Gas Recirculation (EGR) System on Diesel Engine, International Journal of Engineering Research and Applications (IJERA) ISSN: 2248-9622 ,Vol. 3, Issue 4, Jul-Aug 2013, pp.1287-1297,www.ijera.com

[4] Anirudh jaipuriya, Deputy manager, engine R&D, Emission technology overview and cooling requirements, www.ashokleyland.com

[5] Plymouth, Dodge/ Nature outs-pollutes man chart, Chrysler motors corporation ltd.

[6] N. Ravi Kumar*, Y. M. C. Sekhar, and S. Adinarayana,Effect of compression ratio and EGR performance, Department of Mechanical Engineering MVGR College ofEngineering, Vizianagaram,Andhra Pradesh, India,International Journal of Applied Science and Engineering, 2013. 11, 1: 41-49

[7] Ming Zheng, Graham T. Reader, J. Gary Hawley, Types of exhaust gas re-circulation system, Department of Mechanical Engineering, University of Bath, Bath BA2 7AY, UK, Received 4 March 2003; accepted 16 July 2003 "Energy Conversion and Management. 45 (2004) 883–900", www.elsevier.com/locate/enconman